Programación Matemática y Software (2012)
Vol. 4. No 1. ISSN: 2007-3283

Recibido: 29 de septiembre del 2011 Aceptado: 24 de enero del 2012
Publicado en línea: 15 de junio del 2012

# Performance Evaluation of a Memory-Polynomial Model for Microwave Power Amplifiers

J.R. Cárdenas Valdez[1], M. Berber Palafox[2], Christian Gontrand[3], and J.C. Núñez Pérez[1].

[1] Centro de Investigación y Desarrollo de Tecnología Digital, Instituto Politécnico Nacional ; Av. del Parque 1310, Mesa de Otay, C.P. 22150, Tijuana, Baja California, México

[2] Instituto Tecnológico de Lázaro Cárdenas; Av. Melchor Ocampo No. 2555, Cuarto Sector, Cd. Lázaro Cárdenas Mich. C.P. 60950.

[3] Université de Lyon, INSA- Lyon, INL, CNRS UMR5270, Villeurbanne, F-69621, France.

galgo1982@hotmail.com, berber_mauro@yahoo.com.mx, christian.gontrand@insa-lyon.fr, jnunez@ipn.mx.

**Abstract.** This paper is focused on a model for the power amplifier considering the memory effects in short terms, this work was developed for periodic signals through Matlab software and was implemented in Simulink. This model for the power amplifier implements a Memory-Polynomial model. Memory-polynomials prove to be both accurate and easy to implement and was compared with Ghorbani and Saleh quasi- memoryless models to demonstrate its precision.

**Keywords:** Memory effects, Memory polynomial model, Periodic signals, Power amplifier, Radio Satellite Link.

**Resumen.** Este trabajo está enfocado en el modelado del amplificador de potencia considerando los efectos de memoria con pocos términos, este trabajo fue desarrollado para señales periódicas utilizando el software Matlab y fue implementado en Simulink. Este modelo para el amplificador de potencia implementa un modelo Polinomial con memoria. El modelo polinomial con memoria provee precisión y fácil implementación y es comparado con los modelo Cuasi-sin memoria como Ghorbani y Saleh para demostrar su precisión.

**Palabras Clave:** Amplificador de potencia, Efectos de memoria, Modelo Polinomial con memoria, Radioenlace Satelital, Señales periódicas.

## 1 Introduction

An amplifier is a device designed to increase signal power levels. There are mainly two types of amplifiers in Radio Frequency (RF) front end circuits; these are power amplifiers (PA), and low noise amplifiers (LNA). Power amplifiers are mainly present in the transmitters, and are designed to raise the power level of the signal before passing it to the antenna. This power boost is crucial to achieve the desired signal to noise ratio at the receiver, and without which received signals would not be detectable [1]. Nonlinearity is an inherent property of High Power Amplifier (HPA), in wideband applications, HPAs exhibit memory effect as well, which means the current output of an amplifier is stimulated by not only the current input but also previous input. Volterra series are a precise behavioral model to describe moderately nonlinear HPAs [2]. However, high computational complexity continues to make methods of this kind rather impractical in some real applications because the number of parameters to be estimated increases exponentially with the degree of nonlinearity and with the memory length of the system.

## 2 Modeling Power Amplifiers with Memory Effects

The Volterra series can be used to describe any nonlinear stable system with fading memory. Memory effects due to the existence of components which store energy, such as inductors and capacitors, impedance of inductors and capacitors is relevant to frequency. PA memory effect is reflected as a non-linear distortion associated with the signal bandwidth and power [8]. However, its main disadvantages are the dramatic increase in the number of parameters with respect to nonlinear order and memory length, which causes drastic increase of complexity in the identification of parameters. As the input signal bandwidth becomes wider, such as in WCDMA (Wideband Code Division Multiple Access), the time span of the power amplifier memory becomes comparable to the time variations of the input signal envelope. A Volterra series is a combination of linear convolution and a nonlinear power series so that it can be used to describe the input/output relationship of a general nonlinear, causal, and time-invariant system with fading memory [6]. The Volterra series in discrete-domain can be represented as equation (1).

$$\mathbf{y(n)} = \sum_{k}\sum_{l_1} \cdots \sum_{l_{2k+1}} h_{2k+1}(l_1, l_2, \ldots, l_{2k+1}) * \\ * \prod_{i=1}^{k+1} x(n-\tau_i) \prod_{i=k+2}^{2k+1} x^*(n-\tau_i) d\tau_{2k+1} \qquad (1)$$

where (*) denote the complex conjugation and x(n) and y(n) represents the input and output of the model. It can be observed that the number of coefficients of the Volterra series increases exponentially as the memory length and the nonlinear order increase making it unpractical for modeling power amplifiers in real time applications [4].

### 2.1 The Memory-Polynomial Model as Special Case of the Volterra series

The memory-polynomial model, [3] consists of several delay taps and nonlinear static functions. This model is a truncation of the general Volterra series, which consists of only the diagonal terms in the Volterra kernels. Thus, the number of parameters is significantly reduced compared to general Volterra series, the memory-polynomial model is considered as a subset of the volterra series. The model is shown in Figure 1.

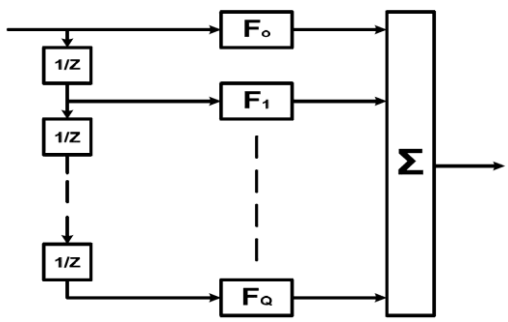


Fig. 1. Memory-Polinomial model.

A Memory-polynomial model considering memory effects and nonlinearity is given by the following equation:

$$y(n) = \sum_{q=0}^{Q} \sum_{k=1}^{K} a_{2k-1,q} |x(n-q)|^{2(k-1)} x(n-q) \quad (2)$$

Where

*x(n)* is the input complex base-band signal.

*y(n)* is the output complex base-band signal.

$a_{k,q}$ are complex valued parameters.

*Q* is the memory depth.

*K* is the order of the polynomial.

**2.2 Implementing of the Memory-Polynomial Model**

As it was expressed in equation (2), a memory-polinomial model can be rewritten as follows:

$$y(n)= \sum_{q=0}^{Q} F_q(n-q) = F_0(n) + F_1(n-1) + F_2(n-2) + \ldots + F_Q(n-Q) \quad (3)$$

where $F_q(n)$ can be expressed as:

$$y(n)= \sum_{k=1}^{K} a_{2k-1,q} |x(n-q)|^{2(k-1)} x(n) \quad (4)$$

The equation (3) can be defined as block diagram as shown in the Figure 2 and Figure 3.

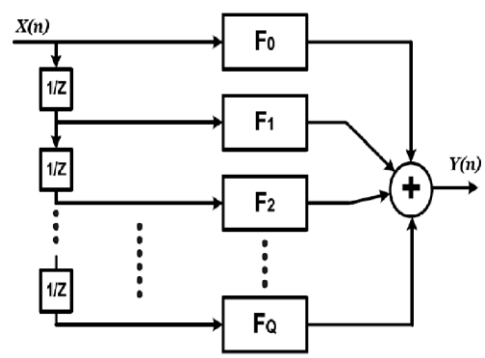


Fig. 2. Implementation of $F_q(n-q)$ as block diagram.

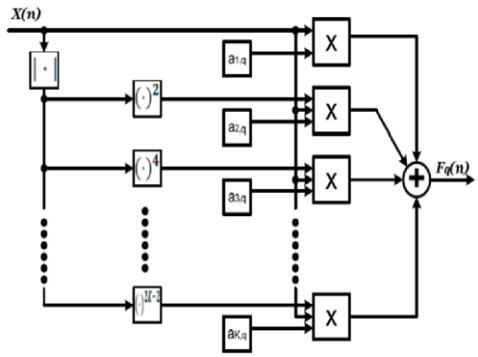


Fig. 3. Implementation of $F_q(n)$ with parameters.

### 2.3 Implementing of the Memory-Polynomial Model using *Matlab –Simulink.*

The Memory-polynomial model can be simulated for any input in Matlab and the gotten parameters can be used for the block diagram developed in Simulink, we present a case demonstration successful treatment of the signal used for this purpose in Matlab and *y(n)* gotten of the Memory-Polynomial Model.

To calculate *y(n)*, we need the next parameters: *x* input of the model, y amplification of the model, *n* order of nonlinearity, *m* order of memory.

Was considered *x* as the sinewave modulated in amplitude during a time $t$ = 0.1 seconds as shown the Figure 4a, $y$ = 5 amplification of the model, $n$ = 1 and $m$ = 0 for purpose of demonstrate the good performance of the model. Memory effects haven't considered for this case but can modify the parameter.

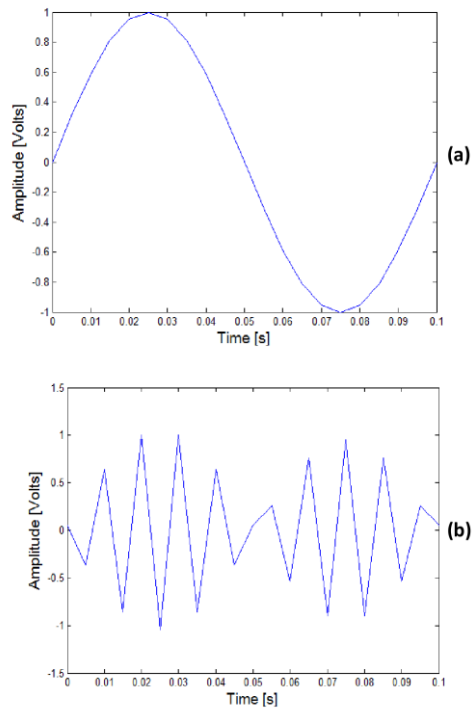


Fig. 4. (a) Input *x(n) = sin(μ)* with $f$ = 10Hz; (b) Amplitude modulated signal with $f_c$ = 100Hz.

The Memory-polynomial model discussed in the previous section was implemented in Simulink. Simulink is a platform for multi-domain simulation and model-based design for dynamic systems. It provides an interactive graphical environment and customizable set of block libraries, and can be extended for specialized applications [5]. Simulink was chosen because it is easy for implementing system level models compared to Matlab. Systems implemented in Simulink can be easily modified and upgraded with minimum coding.

Based on the block diagram showed in the Figure 3 using the parameters gotten of $a_{2k-1,q}$ is possible to create the same structure using the same sinewave and AM Modulation

as can see briefly in the Figure 4b, was inserted a sinewave modulated in amplitude and sampled during 0.1 secs, in the Figure 5 is showed that after 0.1 seconds the amplifier is stable and is amplifying *x(n).*

In comparison with the Volterra series to calculate the parameters $a_{2k-1,q}$ and the output *y(n)*, there is one more internal cycle to generate the output and the parameters so was required more data processing. The Figure 6 shows an overview of the implementation and the Figure 7 the amplified output *y(n)* of the Memory-Polinomial Model.

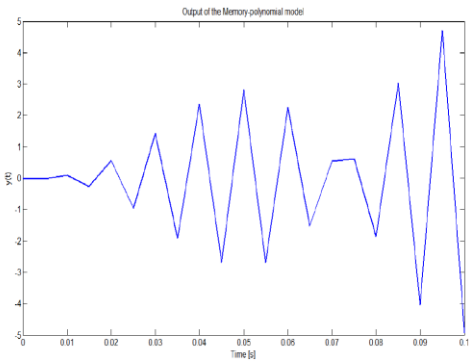


Fig. 5. Exhibits the output signal obtained of the Memory-Polynomial Model.

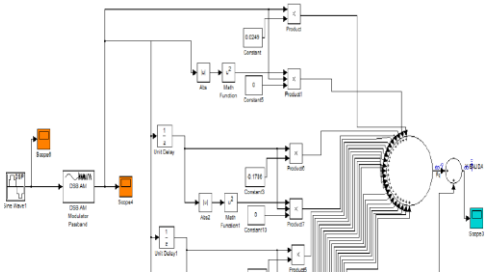

Fig. 6. Overview of Memory-Polynomial model diagram implemented in Simulink.

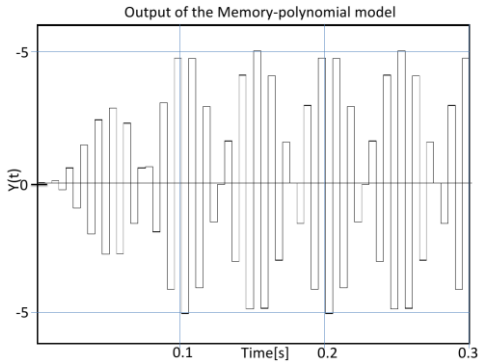


Fig. 7. Output *y(n)* of the Memory-polynomial model.

## 3 Comparison of the Memory-Polynomial Model with Quasi-Memoryless Models as Saleh and Ghorbani.

Quasi-memoryless models take into account both amplitude and phase distortions. Therefore, they are represented by the amplifier AM/AM as well as AM/PM transfer functions. Static models give reasonable accuracy for applications with a narrow-band frequency spectrum or when memory effects are not important. Quasi-memoryless models have better accuracy for narrow-band applications [1].

### 3.1 The Memory-Polinomial model

The Memory-Polynomial Model consists of several delay taps and nonlinear static functions. This model is a truncation of the general Volterra series, which consists of only the diagonal terms in the Volterra kernels. Thus, the number of parameters is significantly reduced comparing to general Volterra series [1]. The Figures 8 and 9 were made considering the intermodulation effect.

As we can see in the Figures 8 and 9 the Memory-Polynomial Model has an

amplification slope between 0V and 1V , this is a good condition if the amplification is going to be used for applications that require just a little energy, i.e. telephones or micro and nano-devices. The Memory-Polynomial Model has the advantage that the AM/PM conversion isn't changing.

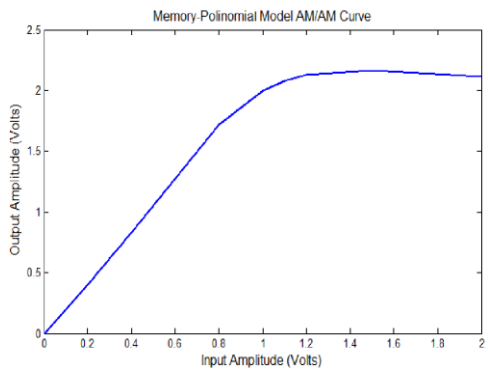


Fig. 8. Memory-Polinomial Model AM/AM curve.

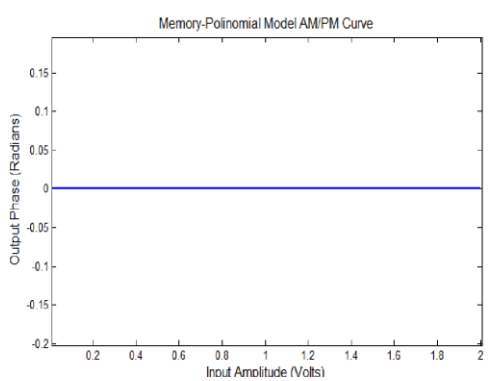


Fig. 9. Memory-Polinomial Model model AM/PM curve.

### 3.2 The Saleh model

The Saleh model is a quasi-memoryless model. It uses four parameters to fit the model to measurement data. Its AM-AM and AM-PM conversion functions are described by the following equations:As

$$g(r(n)) = \frac{\alpha_\alpha r(n)}{1 + \beta_\alpha r(n)^2} \quad (5)$$

$$f(r(n)) = \frac{\alpha_\varphi r(n)}{1 + \beta_\varphi r(n)^2} \quad (6)$$

where $[\alpha_\alpha, \alpha_\varphi, \beta_\alpha, \beta_\varphi]$ are the model's parameters [9]. The equations 5 and 6 can be represented by the Figures 10 and 11, respectively.

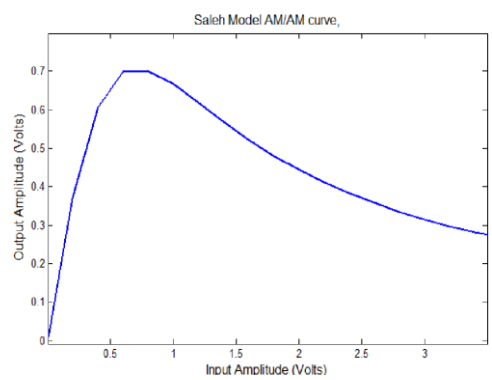


Fig. 10. Saleh model AM/AM curve.

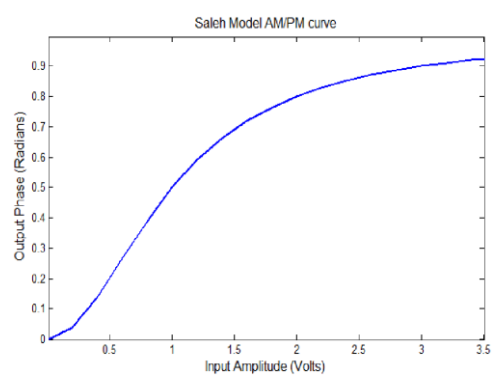


Fig. 11. Saleh model AM/PM curve.

### 3.3 The Ghorbani model

The Ghorbani model uses eight parameters to fit the model to measurement data, this model is quasi-memoryless, and its AM-AM

and AM-PM conversions functions are described by the following equations:

$$g(r(n)) = \frac{x_1 r(n)^{x_2}}{1 + x_3 r(n)^{x_2}} + x_4 r(n) \quad (7)$$

$$f(r(n)) = \frac{y_1 r(n)^{y_2}}{1 + y_3 r(n)^{y_2}} + y_4 r(n) \quad (8)$$

where: [$x_1$, $x_2$, $x_3$, $x_4$, $y_1$, $y_2$, $y_3$, $y_4$] are the models parameters, which are calculated from measurement data by means of curve fitting [10]. The graphic representation of the equations 7 and 8 are showed by the Figures 12 and 13, respectively.

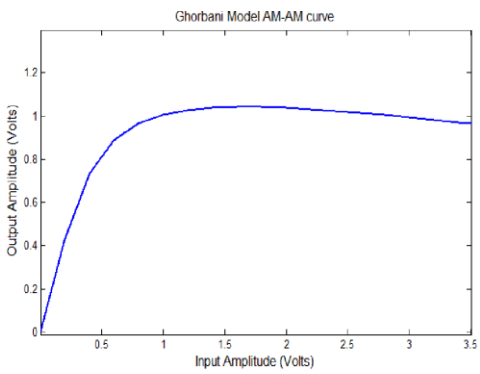


Fig. 12. Ghorbani model AM/AM curve.

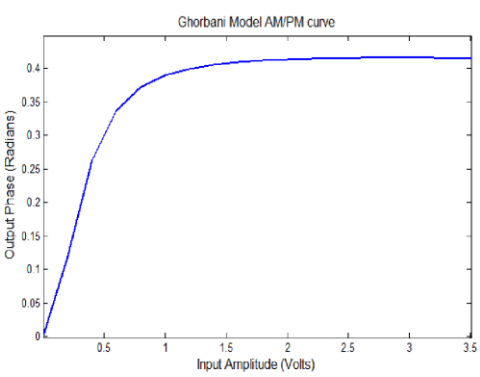


Fig. 13. Ghorbani model AM/PM curve.

Ghorbani model is better suited to the FET amplifiers characteristics and matches them closely [11].

### 3.4 Implementation of Ghorbani, Saleh and Memory-Polynomial Model

The Memory-polynomial Model was compared with the quasi-memoryless models as Saleh and Ghorbani was used a sinewave modulated in Amplitude using a $f_c$ = 100Hz.

The Saleh Model was adjusted *[$\alpha_\alpha$=2.1587, $\alpha_\beta$=4.033, $\beta_\alpha$=1.1517, $\beta_\varphi$=9.1040] the* parameters for the Ghorbani model were: *[$x_1$=8.108, $x_2$=1.5413, $x_3$=6.5202, $x_4$=-0.0718, $y_1$=4.6645, $y_2$=2.0965, $y_3$=10.88, $y_4$=-0.003]*. The Figures 14a and 14b show the amplification gotten of Ghorbani, Saleh and Memory-Polynomial Model.

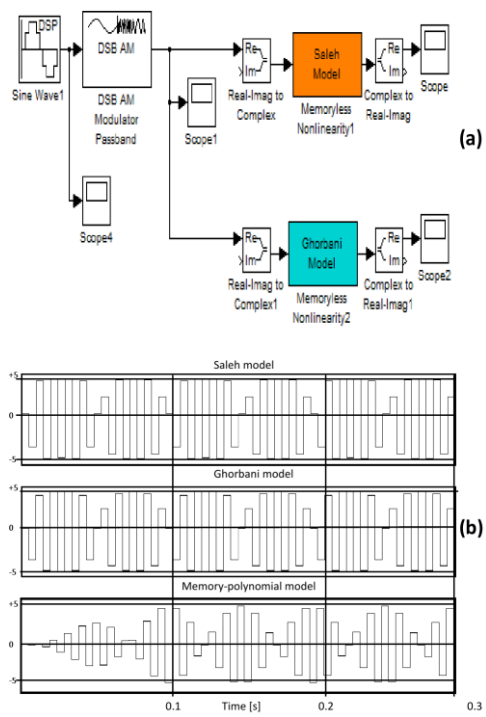


Fig. 14. (a) Overview of Saleh and Ghorbani models,(b) Amplification made by the Saleh, Ghorbani and Memory-polynomial model to a sinewave modulated in Amplitude.

### 3.5 Comparing Models

An RF Satellite Link (Fig. 15) was simulated. In Figures (16-19) are plotted input, AM signal, Memory-polinomial model output, and demodulated output signals are plotted, respectively. This case is for the memory-polynomial model without memory depth.

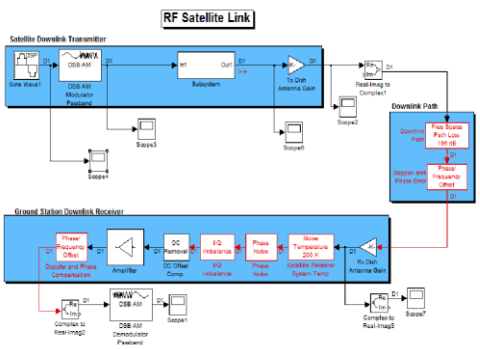


Fig. 15. RF Satellite Link Schematic.

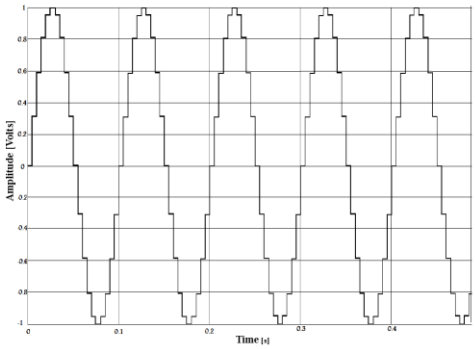


Fig. 16. Input Signal.

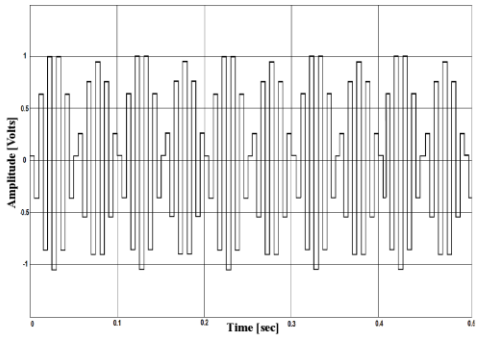


Fig. 17. Signal modulated in Amplitude.

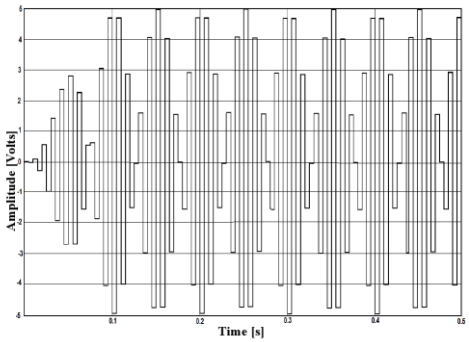


Fig. 18. Output signal of the Memory-polynomial Model.

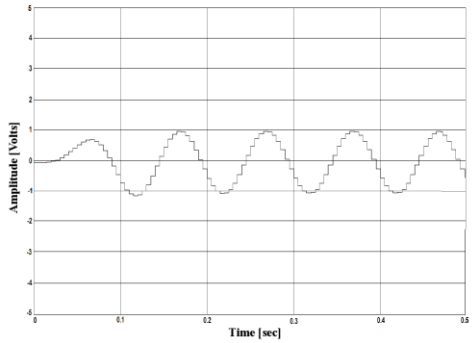


Fig. 19. Demodulated Received Signal.

It can be concluded from Fig. (16-19) that the implemented model fits the amplifier behavior very well. In comparison with quasi-memoryless models (Saleh and Ghorbani), the polynomial model has a signal delay of 108 degrees = 0.8$\pi$ rad. This is because the amplification of the AM modulated signal starts, all states start at zero amplifier and is up to the second cycle of the periodic signal when the amplifier is stable and in all states of the amplifier is part of the input signal. In reality the output of the power amplifier depends on previous inputs as well as the current input of the amplifier.

## 4 Conclusion

The Volterra series is the most general model and is the most accurate one but the number of parameters needed increases dramatically.

Quasi-memoryless models have better accuracy for narrowband applications, for higher frequency applications sometimes aren't enough Quasi-memory less models and it is better to consider the memory effects for such issues.

The Memory-Polynomial Model considers only odd-order nonlinear terms, because the even-order terms are usually outside of the operational bandwidth of the signal and can be easily filtered out.

This model was proved in a RF Satellite Link simulated in Matlab and confirmed in Simulink, was showed good performance of this model as a truncation of the fully Volterra series.

## References

1. E. Arabi and S. Al, MSc. Thesis: “Behavioral Modeling of RF front end devices in Simulink”. Chalmers University of Technology, Göteborg Sweden, 2008.

2. X. Wu, .J. Shi, H. Chen, “On the Numerical Stability of RF Power Amplifiers Digital Predistortion,” *Proceedings of the 15th Asia-Pacific Conference on Communications (APCC 2009)-102.*

3. H. Ku, and J. S. Kenney, “Behavioral Modeling of Nonlinear RF Power Amplifiers Considering Memory Effects,” *IEEE Transactions on Microwave Theory and Techniques*, Vol. 51, No 12, December 2003.

4. L. Ding. PhD. Thesis: “Digital Predistortion of Power Amplifiers for Wireless Applications,” School of Electrical and Computer Engineering, Georgia Institute of Technology, March 2004.

5. “Simulink: Simulation and Model-Based Design”. Available On-line:<http://www.mathworks.com/products/simulink>. Access date: September 2011.

6. A. Zhu, J. C. Pedro and T. J. Brazil, “Dynamic Deviation Reduction-Based Volterra Behavioral Modeling of RF Power Amplifiers,” *IEEE Transactions on microwave theory and techniques*, Vol. 54, No.12, December 2006.

7. Q. Luo, M. Pirola, V. Camarchia, R. Quaglia, R. Tinivella, S. Shen and G. Ghione, “FPGA implementation of adaptive baseband predistortion for FET-based wireless power amplifiers,” *The 1st International Conference on Information Science and Engineering (ICISE2009),* 2009, pp. 2630-2633.

8. H. Zhou, G. Wan and L. Chen, “A Nonlinear Memory Power Amplifier Behavior Modeling and Identification Based on Memory Polynomial Model in Soft-defined Shortwave Transmitter,” *6th International Conference on Wireless Communications Networking and Mobile Computing (WiCOM)*, 23-25 Sept. 2010, pp. 1-4.

9. A.A.M. Saleh, “Frequency-independent and frequency-dependent nonlinear models of TWT amplifiers,” *IEEE Transactions on Communications*, Vol. COM-29, No. 11, November 1981.

10. A. Ghorbani and M. Sheikhan, “The Effect of Solid State Power Amplifiers (SSPAs)

Nonlinearities on MPSK and M-QAM Signal Transmission," *Sixth International Conference on Digital Processing of Signals in Communications*, 2-6 September 1991, pp. 193-197.

11. J. Liebetreu, *et al.* Title: "Proposed System Impairment Models," Project IEEE 802.16 Broadband Wireless Access Working Group, Document Number: IEEE 802.16.1 pc-00/15., February 29th 2000.

**Authors' Biographies**

**José Ricardo Cárdenas Valdez** was born in Tijuana Baja California, México in October 1, 1982. He received the Enginering degree from the Instituto Tecnológico de Tijuana (ITT) in Baja California, México en 2006 and the MSc degree in Digital Systems from the Centro de Investigación y Desarrollo de Tecnologia Digital (CITEDI) of Intituto Politecnico Nacional (IPN), in Tijuana, México in 2008. He is currently working toward the Ph.D. degree in CITEDI-IPN. His research interests include design and madeling of digital and analog devices mainly Power amplifiers, high frequency devices and the FPGA design. His theme of investigation is based on modeling of power amplifiers based on Volterra Series.

**Mauro Berber Palafox** was born in Lázaro Cárdenas, Michoacán, Mexico, on January 15, 1958. He got a Bachellor´s Degree in Communications and Electronics in 1987 at Escuela Superior de Ingeniería Mecánica y Eléctrica (ESIME-IPN). He worked at Siderúrgica Lázaro Cárdenas (Steel Making Industry), Las Truchas in electronic maintenance areas, in weighing bands, and weighing platforms (150 tons). He was also in charge of radiologic security and updating control equipment in productive plants, from 1982-1994. Nowadays, he has been teaching Introduction to Telecommunications, Analog Electronics II and Electrical Measurements at the Instituto Tecnológico de Lázaro Cárdenas since 1991. He got the degree in Teaching Technical Education in 1997 by the Centro Interdisciplinario de Investigación y Docencia (CIIDET). Currently his research is based on Analysis on Power Amplifier with Memory Models Applied on a Satellite Radiolink. to get his MSc Degree in the Centro de Investigación y Desarrollo de Tecnología Digital (CITEDI-IPN).

**Christian Gontrand** was born in Montpellier, France, on February 21, 1955. He received his M.S., Ph.D. and "State Doctorat" (Habilitation diploma) degrees, in 1977, 1982, and 1987, in electronics, from the *Université des Sciences et Techniques du Languedoc*, Montpellier, France. From 1982 to 1984, he has been working with the Thomson "*Laboratoire Central de Recherche*" (LCR), Orsay, where his areas of interest included

theoretical (electrical transport) and experimental (noise) of microwave devices (TEGFETs/HEMTs). From 1988, he joined the laboratoire de Physique de la Matière (LPM/INSA), Villeurbanne, as a Research Assistant Professor. From 1988 to 1996, he had the technical charge of the new "*Centre de Micro électronique de la Région Lyonnaise*" (CIMIRLY), and worked on new RF compatible silicon devices, in collaboration with the Centre National des Etudes en Telecommunication (CNET), Meylan. From 1997 to 2001, as a Professor in semiconductor devices and circuits, he was at the head of the team "Smart System Integration", at the "*Centre de Génie Electrique de Lyon*" (CEGELY); from 2002, his was at the Head of the team "Radiofrequency Devices, Circuits and Systems" of the LPM/INL, dealing with noises or parasitic disturbances in mixed complex 2D and 3D RF circuits and systems.

**José Cruz Núñez Pérez** was born in Uruapan Michoacan, Mexico, in April 2, 1978. He received the MSc degree in electronics engineering from the Centro Nacional de Investigación y Desarrollo Tecnológico (CENIDET), in Cuernavaca, Mexico, in 2003, and the PhD degree from the *Institut National des Sciences Appliquées de Lyon* (INSA-Lyon), Villeurbanne France, in 2007. In first semester 2008, he was a Research Director at Advanced Technology Research S.A. de C.V. (ATR) in Guadalajara, Mexico, where he led a team of researchers working on networking, and telecommunication architectures. Currently, he is a Professor at the Centro de Investigación y Desarrollo de Tecnologia Digital (CITEDI) of Intituto Politecnico Nacional (IPN), in Tijuana, Mexico. He is the Research Coordinator in Telecommunications Department at CITEDI-IPN. His research interests include digital and analog circuits design, device physic modeling, Si/SiGe:C heterojunction bipolar transistor, VCO design, oscillator phase noise, high frequency circuits, DSP and FPGA design, circuit and system co-simulation, and electromagnetic compatibility.